The Ultimate in Fall Protection

ADVANCED
DECK MOUNTED SLEEVES

Model Numbers: *8515162, 8515834*

INSTRUCTION MANUAL

ANSI Z359.1

This manual is intended to meet the Manufacturer's Instructions as required by ANSI Z359.1 and should be used as part of an employee training program as required by OSHA

Figure 1 - 8515162, 8515834

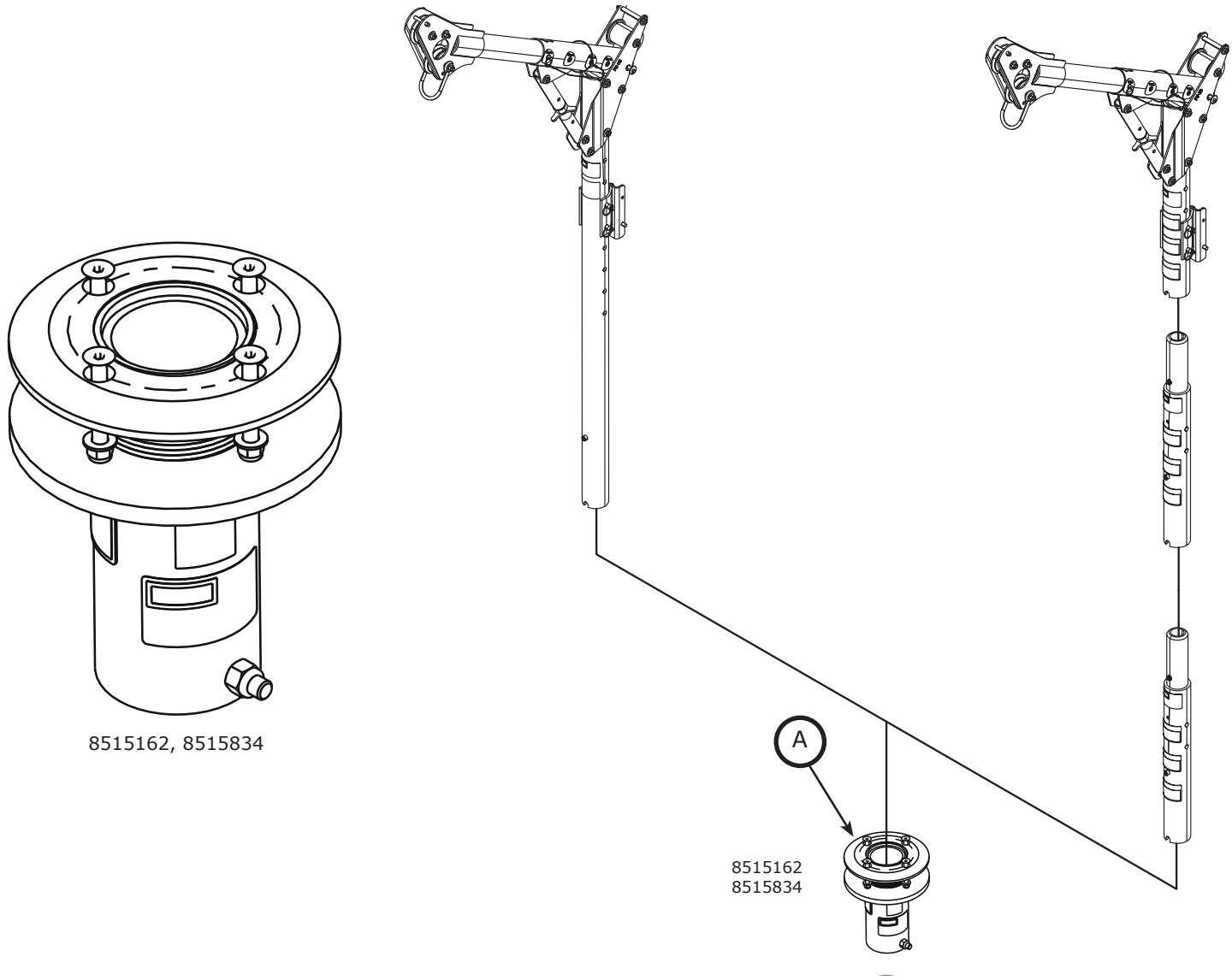

© Copyright 2015, Capital Safety

1. SPECIFICATIONS:

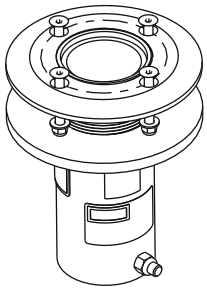

DESCRIPTION:

The DBI-SALA Floor Mount Bases are designed for mounting to horizontal concrete or steel structure

A THESE BASES ARE ONLY COMPATIBLE WITH DBI SALA ADVANCED DAVIT MASTS AND EXTENSIONS.

IMPORTANT: All connecting systems, (self retracting lifelines, winches and energy absorbing lanyards) used with the davit arm and base system shall limit the arresting forces to 900 lbs (4kN).

GENERAL SPECIFICATIONS - MODEL 8515162:

Rated Capacity (working load)	450 lbs (205 kg)
Vertical Load	5000 lbs (22.24 kN)

MATERIALS & CONSTRUCTION:

General Construction	Welded Steel
Material	Mild Steel
Hardware (Minimum)	Gr. 8 Steel, Zinc Plated
Finish (Steel)	Zinc Plated
Plating Specification	ASTM Designation B633, Type II, Class 1

APPLICATION RESTRICTIONS:

For use with Capital Safety Systems products and accessories only.

Each installation must be approved to local standards by a ***qualified*** engineer.

If base material does not meet the minimum requirements, reinforcement must be added to meet the minimum requirements.

GENERAL SPECIFICATIONS - MODEL 8515834

Rated Capacity (working load)	450 lbs (205 kg)
Vertical Load	5000 lbs (22.24kN)

MATERIALS & CONSTRUCTION:

General Construction	Stainless Steel
Material	304 SS
Hardware (Minimum)	Gr. 8 Steel, Zinc Plated and SS
Finish (Stainless Steel)	Brush Blast
Plating Specification	None

APPLICATION RESTRICTIONS:

For use with Capital Safety Systems products and accessories only.

Each installation must be approved to local standards by a ***qualified*** engineer.

If base material does not meet the minimum requirements, reinforcement must be added to meet the minimum requirements.

Figure 2 – Base Dimensions

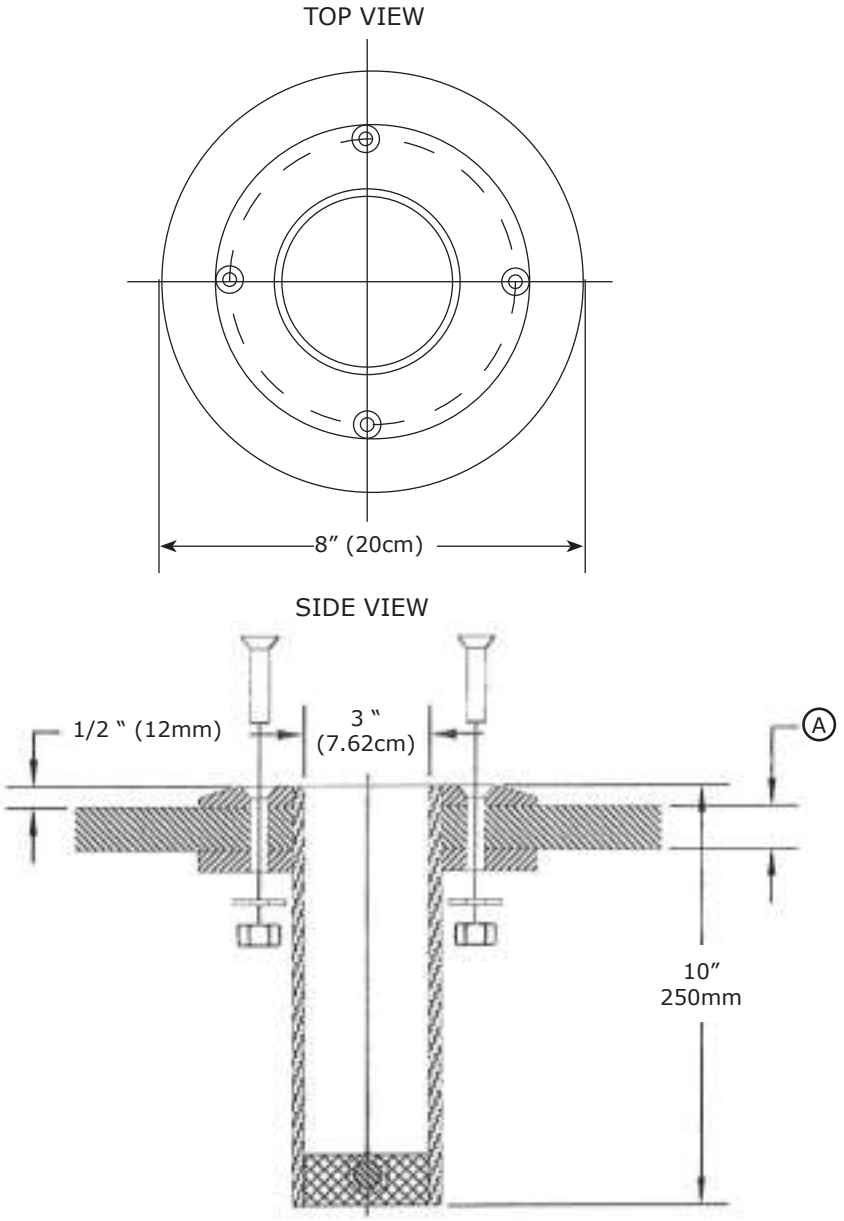

WARNING: Installers shall ensure the suitability of base materials into which structural anchor devices are fixed.

Where an anchor device is intended to be used exclusively for personal protective equipment, it should be clearly marked by pictogram, or other clearly seen and understood marking, on or near the anchor device, clearly stating that the devise is designed exclusively for use of personal protective equipment. Anchor devices are only to be used with ANSI Marked fall arrest systems, which will generate forces not to exceed 900lbs (4kN) at the anchor device.

Due care should be taken to assess the suitability of all transportable temporary anchor devices and any associated fixings for the application in which it is to be used. The viability of any installation should be verifiable by a qualified engineer.

Ⓐ The Deck Minimum Thickness for **Steel** is 1/4 " (6.35mm) and the Maximum Deck Thickness for ***Steel*** is 2.0" (5cm) for an approved installation.

Table 1 – Mounting Requirement Minimums		
	29 inches (73.6cm) Offset	48 inches (122cm) Offset
Pullout Force Per Base	9,375 lbs (4252.4 kg)	9,900lbs (4490.5 kg)
Shear Force	N/A	N/A
Moment Load Per Structure	75,000 in*lbs (8.4 kN*m)	79,200 in*lbs (8.9 kN*m)
Vertical Load Per Structure	5000lbs (2267.9 kg)	1800 lbs (8 kN)

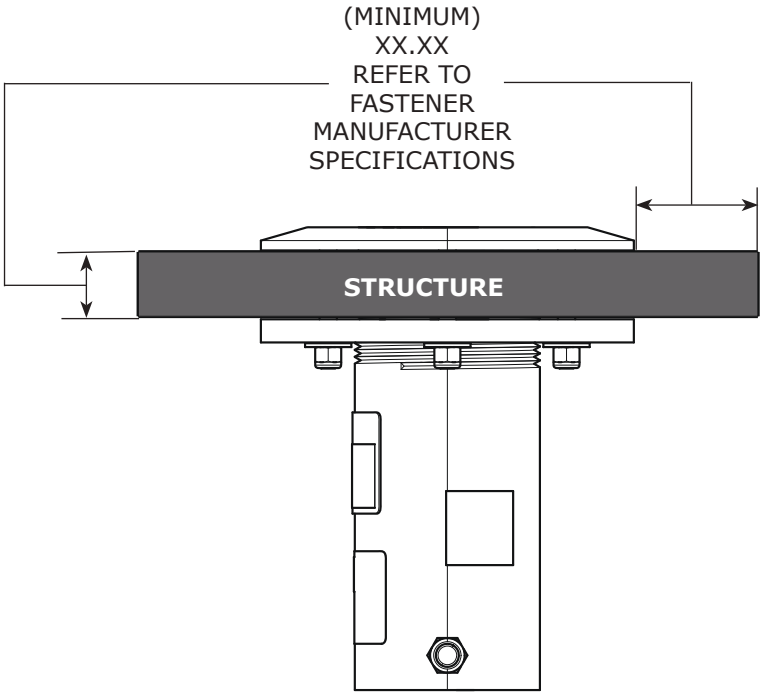

NOTE: These numbers are based on a Safety Factor of 2:1. Refer to the fastener manufacturer specifications for fastener safety factors. Capital Safety recommends maintaining at least a safety factor of 2:1. Multiple safety factor must be taken into account when determining fasteners.

IMPORTANT: Base installation must be approved to local regulations by a qualified engineer. Refer to the fastener manufacturer for location of the fasteners, structure thickness, and structure type requirements

WARNING: Failure to follow *Mounting Requirement Minimums* and *Installation* instructions may lead to severe injury and/or death.

3. INSTALLATION:

WARNING: Failure to follow *Mounting Requirement Minimums* and *Installation* instructions may lead to severe injury and/or death.

IMPORTANT: Refer to the davit mast, davit arm and fastener instructions for specific mounting requirements. There are many factors that will determine a proper installation of the base, such as fastener material and davit arm length. These factors must all be considered prior to base installation.

NOTE: The Deck Minimum Thickness for steel is 1/4 " (6.35mm) and the Maximum Deck Thickness for Steel is 2.0" (5cm).

NOTE: For deck thicknesses of less than 1/2" (12.7mm), shorter mounting bolts ***must be*** used.

NOTE: For deck thicknesses of greater than 1 1/2" (39mm), longer mounting bolts ***must be*** used. Contact local dealer or manufacturer for assistance.

Figure 3 – Deck Mounted Davit Base Installation

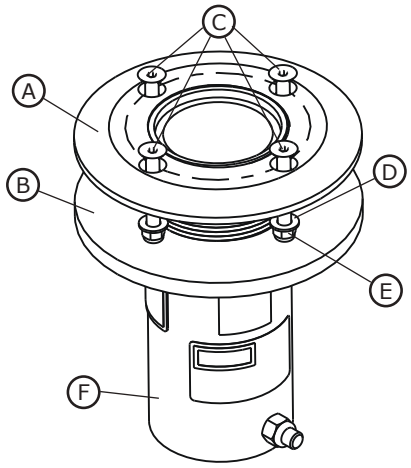

A-Upper Plate, B-Lower Plate, 3/8" Countersunk Screws, D-Flat Washer, E-Lock Nut, F-Sleeve Tube.

1. Cut a Ø 4 1/16" (10.3cm) through decking surface.
2. Thread lower plate on to sleeve tube so that the top of the lower plate is [deck thickness] + 1/2" (12.7mm) from the end of the sleeve tube.
3. Install sleeve tube and lower plate from the underside of the deck. Tighten using special installation tooling or by other means.
4. Using a Ø 13/32" (10mm) drill bit and using the holes in the upper plate as a guide, drill four holes through the deck and the lower plate.
5. Install 3/8" countersunk screws from the top side of deck. Install the corresponding flat washers and lock nuts from the lower side of the deck. (NOTE**:** Red Loctite® or equivalent should be used on all threaded connections.)
6. A ***qualified*** *engineer* must verify the structural installation meets local and federal regulations.
7. A *qualified engineer* must recommend the appropriate fasteners and determine proper base placement on the mount structure.

IMPORTANT: All mounting hardware must be able to withstand a minimum pull out force of 9,900 lbs (4490.5 kg) each if using a 48 inches (122cm) offset. If a 29 inches 73.6cm offset is used, a minimum pullout 9,375 lbs (4252.4 kg) is required. See Table 1 for specific installion guidelines. (2:1 Safety Factor.)

4. DAVIT BASE INSPECTION:

BEFORE EACH USE:

IMPORTANT: Extreme working conditions (harsh environments, prolonged use) may require increasing the frequency of inspections.

WARNING: If the base has been subjected to fall arrest forces, it must be immediately removed from service and inspected. If the base fails inspection, remove from service and destroy, or contact Capital Safety for repair or replacement.

Table 2 – Inspection and Maintenance Log

Serial Number(s):	**Date Purchased:**
Model Number:	**Date of First Use:**
Inspected By:	**Inspection Date:**

Component:	**Inspection:**	**Authorized Person or Rescuer**	**Competent Person**
Davit Base	Ensure all bolts are secure and not damaged.	☐	☐
	Base should be inspected directly after installation and at same intervals as the arresting system for similar defects and/or unsafe conditions.	☐	☐
	All labels must be present and fully legible.	☐	☐
	If inspection reveals an unsafe or defective condition, remove the base from service and destroy, or contact Capital Safety for repair or replacement.	☐	☐
	Look for signs of corrosion on the entire unit that could affect the strength and operation of the system.	☐	☐

Corrective Action/Maintenance:	Approved By:
	Date:
Corrective Action/Maintenance:	Approved By:
	Date:
Corrective Action/Maintenance:	Approved By:
	Date:
Corrective Action/Maintenance:	Approved By:
	Date:
Corrective Action/Maintenance:	Approved By:
	Date:
Corrective Action/Maintenance:	Approved By:
	Date:
Corrective Action/Maintenance:	Approved By:
	Date:
Corrective Action/Maintenance:	Approved By:
	Date:
Corrective Action/Maintenance:	Approved By:
	Date:
Corrective Action/Maintenance:	Approved By:
	Date:
Corrective Action/Maintenance:	Approved By:
	Date:
Corrective Action/Maintenance:	Approved By:
	Date:
Corrective Action/Maintenance:	Approved By:
	Date:

5. DAVIT BASE LABELS

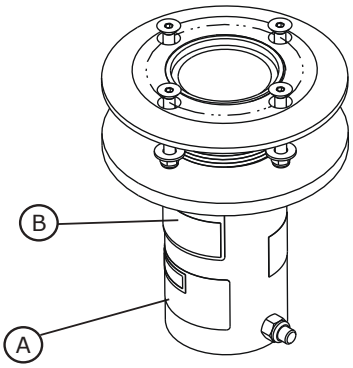

A

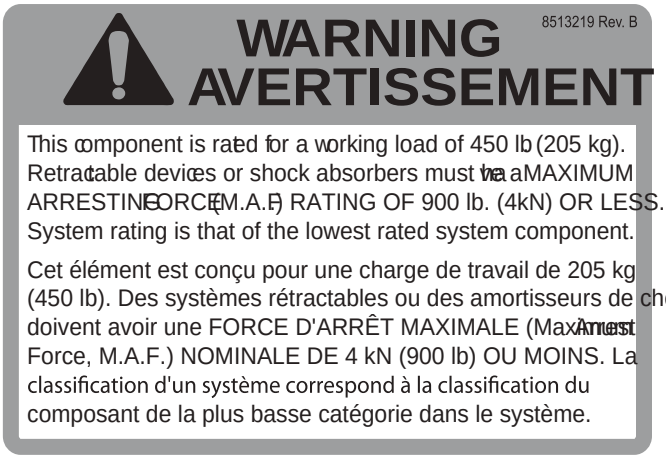

B

LIMITED LIFETIME WARRANTY

Warranty to End User: D B Industries, LLC dba CAPITAL SAFETY USA ("CAPITAL SAFETY") warrants to the original end user ("End User") that its products are free from defects in materials and workmanship under normal use and service. This warranty extends for the lifetime of the product from the date the product is purchased by the End User, in new and unused condition, from a CAPITAL SAFETY authorized distributor. CAPITAL SAFETY'S entire liability to End User and End User's exclusive remedy under this warranty is limited to the repair or replacement in kind of any defective product within its lifetime (as CAPITAL SAFETY in its sole discretion determines and deems appropriate). No oral or written information or advice given by CAPITAL SAFETY, its distributors, directors, officers, agents or employees shall create any different or additional warranties or in any way increase the scope of this warranty. CAPITAL SAFETY will not accept liability for defects that are the result of product abuse, misuse, alteration or modification, or for defects that are due to a failure to install, maintain, or use the product in accordance with the manufacturer's instructions.

CAPITAL SAFETY'S WARRANTY APPLIES ONLY TO THE END USER. THIS WARRANTY IS THE ONLY WARRANTY APPLICABLE TO OUR PRODUCTS AND IS IN LIEU OF ALL OTHER WARRANTIES AND LIABILITIES, EXPRESSED OR IMPLIED. CAPITAL SAFETY EXPRESSLY EXCLUDES AND DISCLAIMS ANY IMPLIED WARRANTIES OF MERCHANTABILITY OR FITNESS FOR A PARTICULAR PURPOSE, AND SHALL NOT BE LIABLE FOR INCIDENTAL, PUNITIVE OR CONSEQUENTIAL DAMAGES OF ANY NATURE, INCLUDING WITHOUT LIMITATION, LOST PROFITS, REVENUES, OR PRODUCTIVITY, OR FOR BODILY INJURY OR DEATH OR LOSS OR DAMAGE TO PROPERTY, UNDER ANY THEORY OF LIABILITY, INCLUDING WITHOUT LIMITATION, CONTRACT, WARRANTY, STRICT LIABILITY, TORT (INCLUDING NEGLIGENCE) OR OTHER LEGAL OR EQUITABLE THEORY.

capital SAFETY

Global Leader in Fall Protection

USA
3833 SALA Way
Red Wing, MN 55066-5005
Toll Free: 800.328.6146
Phone: 651.388.8282
Fax: 651.388.5065
solutions@capitalsafety.com

Brazil
Rua Anne Frank, 2621
Boqueirão Curitiba PR
81650-020
Brazil
Phone: 0800-942-2300
brasil@capitalsafety.com

Mexico
Calle Norte 35, 895-E
Col. Industrial Vallejo
C.P. 02300 Azcapotzalco
Mexico D.F.
Phone: (55) 57194820
mexico@capitalsafety.com

Colombia
Compañía Latinoamericana de Seguridad S.A.S.
Carrera 106 #15-25 Interior 105 Manzana 15
Zona Franca - Bogotá, Colombia
Phone: 57 1 6014777
servicioalcliente@capitalsafety.com

Canada
260 Export Boulevard
Mississauga, ON L5S 1Y9
Phone: 905.795.9333
Toll-Free: 800.387.7484
Fax: 888.387.7484
info.ca@capitalsafety.com

EMEA (Europe, Middle East, Africa)
EMEA Headquarters:
5a Merse Road
North Moons Moat
Redditch, Worcestershire
B98 9HL UK
Phone: + 44 (0)1527 548 000
Fax: + 44 (0)1527 591 000
csgne@capitalsafety.com

France:
Le Broc Center
Z.I. 1re Avenue - BP15
06511 Carros Le Broc Cedex
France
Phone: + 33 04 97 10 00 10
Fax: + 33 04 93 08 79 70
information@capitalsafety.com

Australia & New Zealand
95 Derby Street
Silverwater
Sydney NSW 2128
Australia
Phone: +(61) 2 8753 7600
Toll-Free : 1800 245 002 (AUS)
Toll-Free : 0800 212 505 (NZ)
Fax: +(61) 2 8753 7603
sales@capitalsafety.com.au

Asia
Singapore:
69, Ubi Road 1, #05-20
Oxley Bizhub
Singapore 408731
Phone: +65 - 65587758
Fax: +65 - 65587058
inquiry@capitalsafety.com

Shanghai:
Rm 1406, China Venturetech Plaza
819 Nan Jing Xi Rd,
Shanghai 200041, P R China
Phone: +86 21 62539050
Fax: +86 21 62539060
inquiry@capitalsafety.cn

www.capitalsafety.com

ISO 9001