Floor Mount Sleeve
Model#: 8510057 (Mild Steel) / 10425 (S.S.)

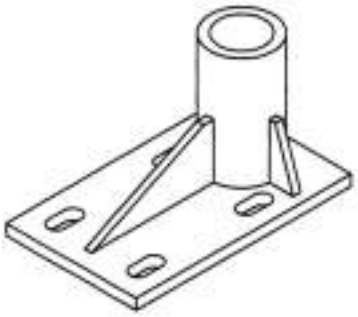

DESCRIPTION

Zinc plated mild steel or 304 stainless steel construction.
Mounts to horizontal concrete or steel structure. The off-set design allows for maximum reach of the mast being used. Comes with PVC sleeve liner.

General Specifications:

Rated Capacity(*working load*)	450 lbs. (205 Kgs.) @ minimum 4:1 Design Factor *(see appl. restriction 2)*
Mast Moment Proof Load	90.000 In.-lbs (10,000 N.m)
Proof Tests	Uct-019A, Uct-131
Mast Rotation	360°
Weight	25 lbs(11.5 Kg)

Note: Sleeves are designed to withstand the proof load rating of all standard CSG Systems masts.

Materials and Construction:

General Construction	Welded Steel/Stainless Steel
Weld Certification	CWB-47.1
Structure Material	A-36 Steel Plate/304 S.S.
Sleeve Material	Sch. 40 Pipe/304 S.S.
Sleeve Bearing Material	PVC Pipe - ASTM-D-1785
Thrust Bearing Material	High Density Polyethene
Finish (*Steel Sleeves*)	Zinc Plated
Finish (*Stainless Steel*)	Brush Blast
Plating Specification	ASTM Designation B633-85, Type III, SC2

Mounting Requirements(minimum):

The Structure and mounting hardware must be capable of withstanding a 90,000 in.-lbs(10000 N.m) moment and a 5000 lbs. (2268 Kg.) vertical load.
Anchors used to mount this base must have an installed minimum pull-out strength of 10000 lb (44.4 KN) and a shear strength Of 5000 lb (22.2 KN).
Installation **MUST BE** approved to local regulations by a qualified engineer.

Application Restrictions:

1. Sleeves are for use with masts & accessories manufactured by Capital Safety Group Ltd. **ONLY**.
2. System design factor depends on other system components and the configuration in which they are assemblied. The minimum design factor for all standard CSG Safety Systems masts and accessories is 4:1.
3. All welding is to be carried out by qualified personnel.
4. If base material does not meet minimum requirements, reinforcement **MUST BE** added to meet minimum requirements.
5. Each installation **MUST BE** approved to local standards by a qualified engineer.

CERTIFICATION

CE

ISO 9001
REGISTERED

Floor Mount Sleeve

Model#: 8510057 (Mild Steel) / 10425 (S.S.)

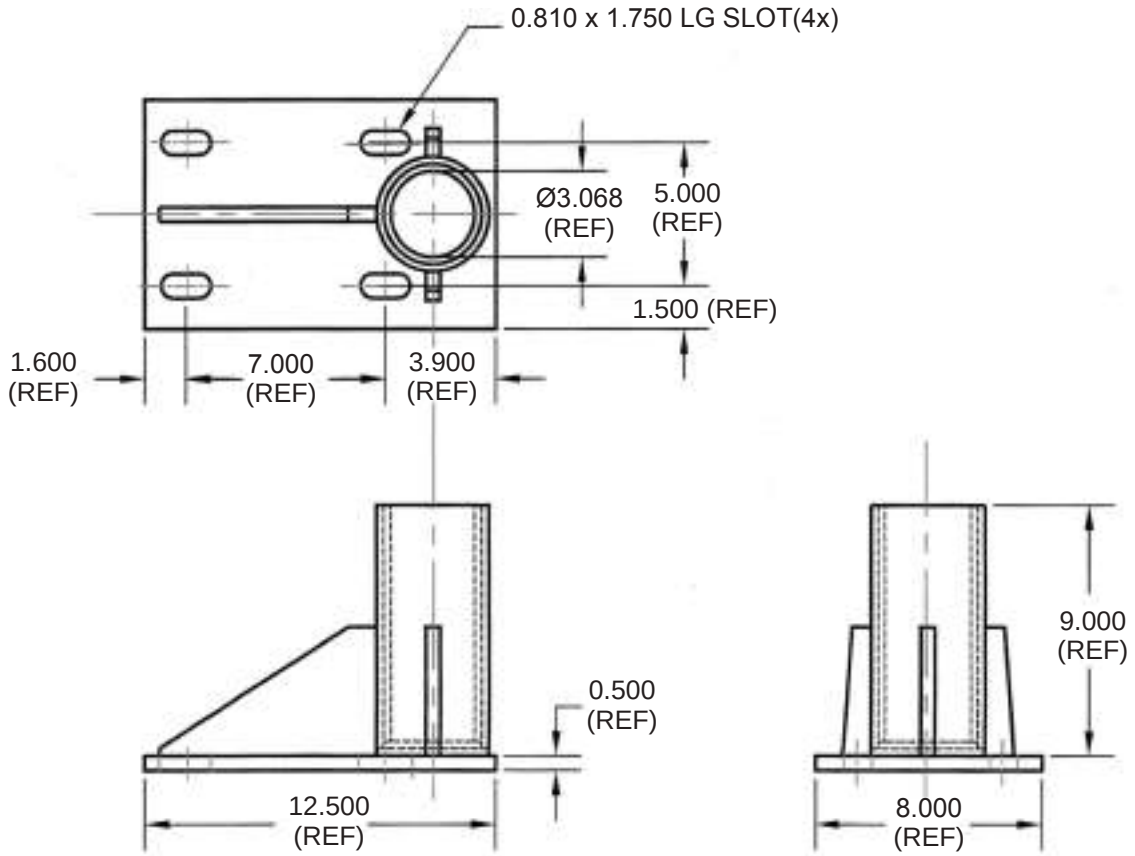

CE

ISO 9001
REGISTERED

Core Mount Sleeve
Model#: 8510109 (Mild Steel) / 8510110 (S.S.)

Description

Zinc plated mild steel or 304 stainless steel construction. Designed for slip-in installation into 04.0 core hole in concrete or in an existing steel structure. Comes with PVC sleeve liner.

General Specifications:

Rated Capacity(*working load*)	450 lbs. (205 Kgs.) @ minimum 4:1 Design Factor *(see appl. restriction 2)*
Mast Moment Proof Load	90.000 In.-lbs (10,000 N.m)
Mast Rotation	360°
Weight	8 lbs(3.6 Kg)

Note: Sleeves are designed to withstand the proof load rating of all standard CSG Systems masts.

Materials and Construction:

General Construction	Welded Steel/Stainless Steel
Weld Certification	CWB-47.1
Structure Material	A-36 Steel Plate/304 S.S.
Sleeve Material	Sch. 40 Pipe/304 S.S.
Sleeve Bearing Material	PVC Pipe - ASTM-D-1785
Thrust Bearing Material	High Density Polyethene
Finish (*Steel Sleeves*)	Zinc Plated
Finish (*Stainless Steel*)	Brush Blast
Plating Specification	ASTM Designation B633-85, Type III, SC2

Mounting Requirements(minimum):

The Structure and mounting hardware must be capable of withstanding a 90,000 in.-lbs (10000 N.m) moment and a 5000 lbs. (2268 Kg.) vertical load. Installation **MUST BE** approved to local regulations by a qualified engineer.

Note: Concrete MUST BE sufficiently thick or have sufficient underlying structure to support the 5000 lbs. (2268 Kg.) vertical load requirement specified above.

Application Restrictions:

1. Sleeves are for use with masts & accessories manufactured by Capital Safety Group Ltd. **ONLY**.
2. System design factor depends on other system components and the configuration in which they are assemblied. The minimum design factor for all standard CSG Safety Systems masts and accessories is 4:1.
3. All welding is to be carried out by qualified personnel.
4. If base material does not meet minimum requirements, reinforcement **MUST BE** added to meet minimum requirements.
5. Each installation **MUST BE** approved to local standards by a qualified engineer.

Certification:

CE

ISO 9001
REGISTERED

Core Mount Sleeve

Model#: 8510109 (Mild Steel) / 8510110 (S.S.)

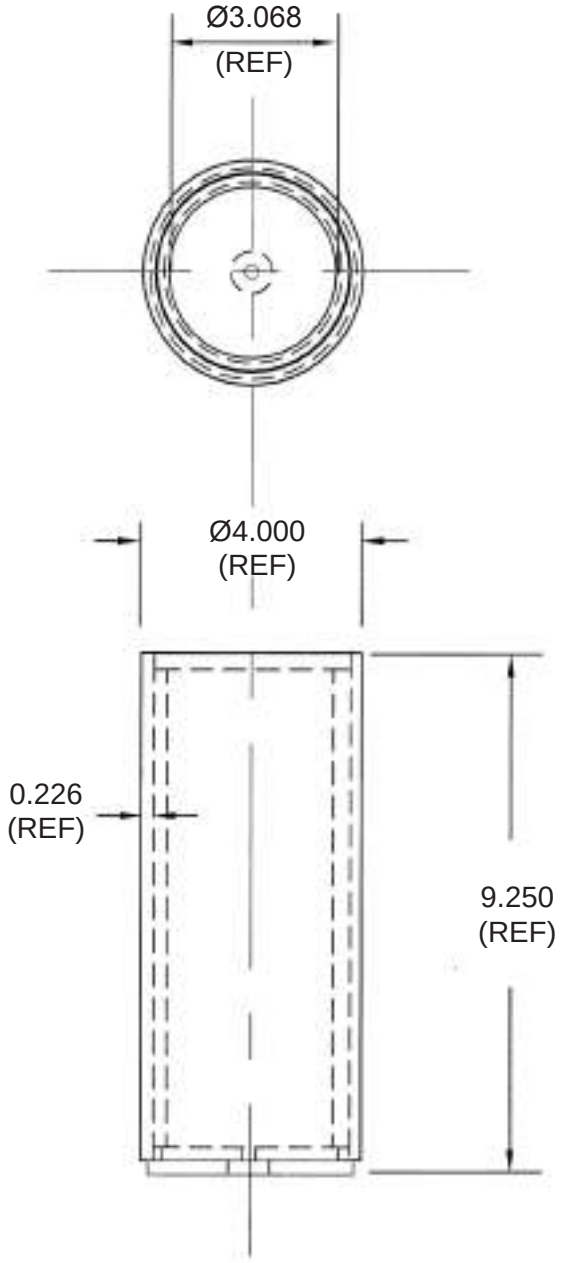

Hitch Mount Sleeve
Model#: 8510140

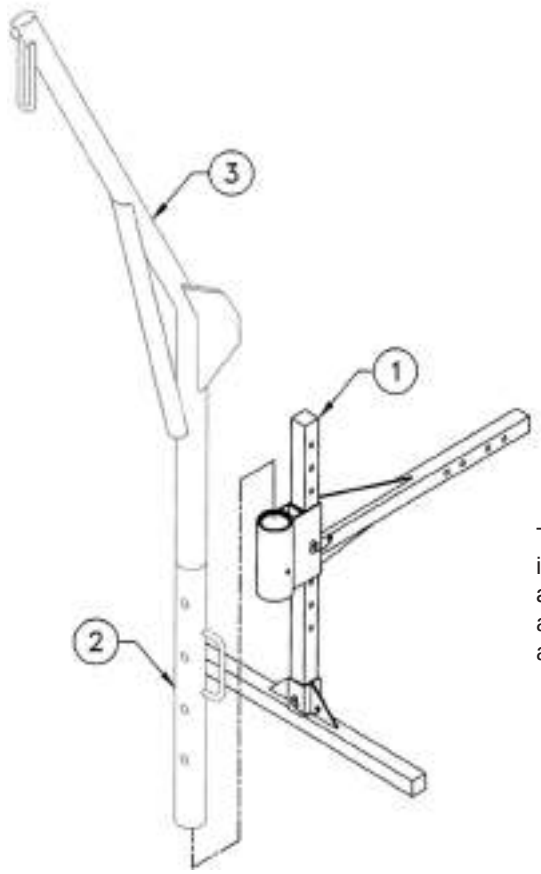

Model 8511401 includes the following

Item	Part no.	Description
1	**8510140**	Hitch Mount Sleeve
accessories shown in gray, but not included		
2	**5210001**	30” (750 mm) Lower Mast
3	**8512820**	18” (457 mm) Offset Upper Mast

DESCRIPTION

The CSG Safety Sytems Hitch Mount Sleeve is designed to install into a 2” hitch receiver on an attendant vehicle to provide a portable anchor point for confined space entry / retrieval, rescue and fall-arrest systems. Various sockets, extensions and accessories are available to allow use of the sleeve in a multitude of situations.

General Specifications:

Working Load	450 lbs. (204 Kgs.)
Design Factor	Dependent on other system components, Minimum 4:1
Proof Load	90,000 in.llbs (10170 N.-m.)
Proof Test	UCT-015A
Weight	49 lbs. (22.2 kgs)

Materials and Construction:

General Construction	Welded Steel/Aluminum
Weld Certification	CWB-47.1, CWB-47.2
Material (aluminum)	5052-H32, 6061-T6 Aluminum
Finish (aluminum)	Gray powder coat
Material (steel)	H.R. Steel Plate, Sch. 40 Pipe
Finish (steel)	Zinc Plated
Liner Material	PVC Pipe, ASTM-D-1785
Thrust Bearing Material	High Density Polyethene
Hardware	Gr.5, Gr.8 - Zinc Plated
Plating Specification	ASTM Designation B633-85, Type III, SC2

Application Restrictions

1. This device is intended for use with equipment and accessories manufactured and/or approved by Capital Safety Group Ltd. Accessories are subject to various application restrictions as outlined on the application accessory specification sheets.
2. Anchoring to an attendant vehicle may not be permitted within certain jurisdictions. Ensure that use of this equipment does not violate any regulations within your area.
3. The standard Hitch Mount Sleeve is to be used with a maximum 18" (457 mm) offset mast.
4. Hitch mount sleeve extensions are available to position the sleeve further away from the attendant vehicle. Only 1 extension at a time is to be used. Multiple hitch mount extensions **ARE NOT** to be used.
5. One mast extension up to a maximum of 24" (610 mm) may be used. Multiple extensions **MUST NOT** be used.
6. Each installation **MUST BE** approved to local standards by a qualified engineer.

CE

ISO 9001
REGISTERED

Hitch Mount Sleeve
Model#: 8510140

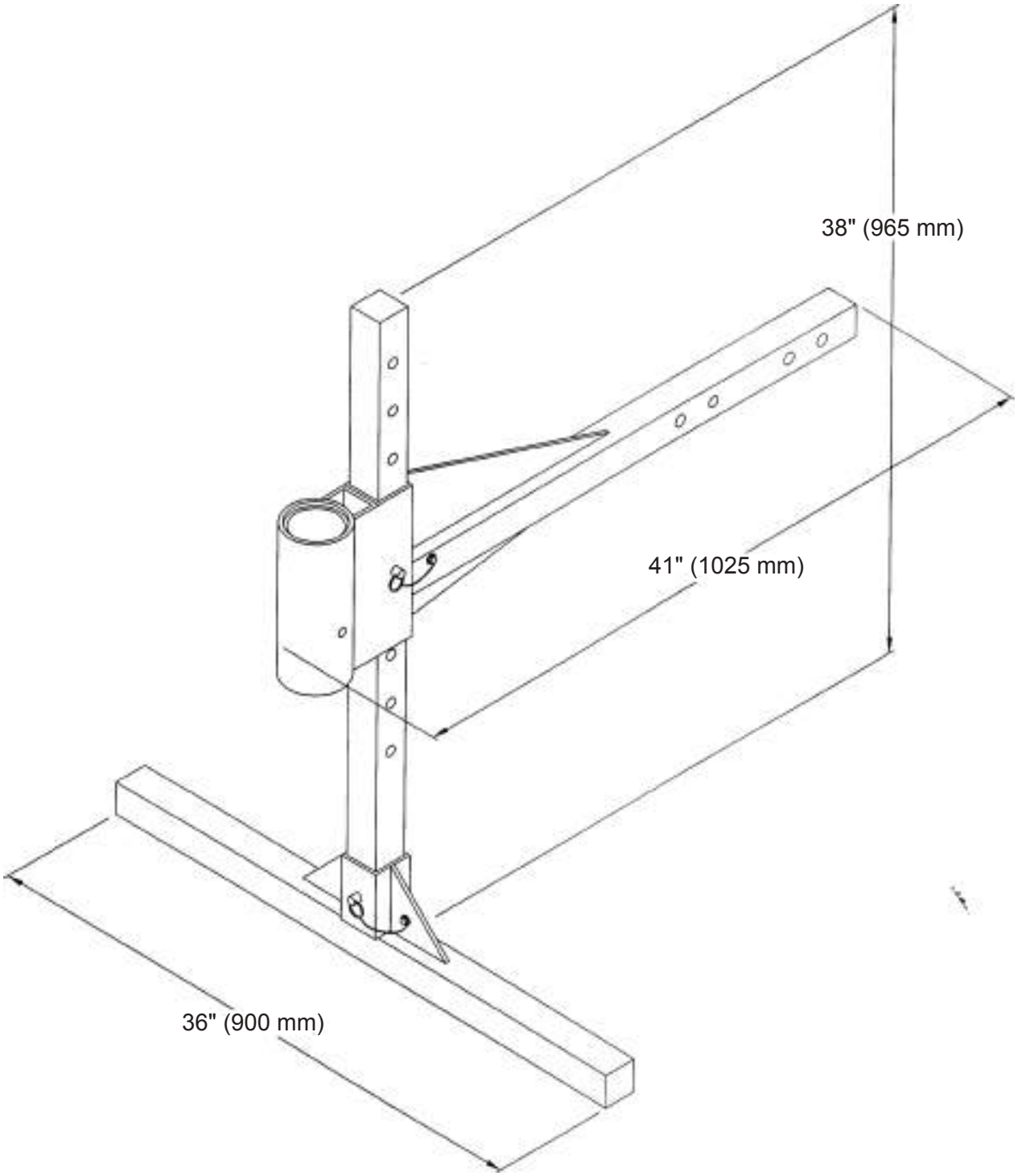

CE

ISO 9001
REGISTERED

Flush Mount Sleeve
Model#: 8510311 (Mild Steel) / 8512828 (S.S.)

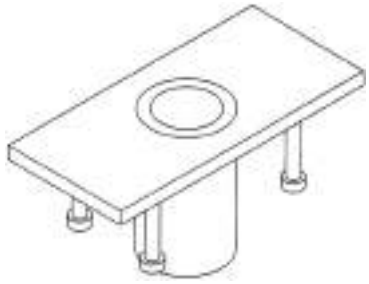

Description

Zinc plated mild steel or 304 stainless steel construction. Comes with cast-in-place concrete anchors for new construction or renovation. Flush mount design allows passage of traffic and eliminates trip hazards when not in use. Comes with PVC sleeve liner.

General Specifications:

Rated Capacity(*working load*)	450 lbs. (205 Kgs.) @ minimum 4:1 Design Factor *(see appl. restriction 2)*
Mast Moment Proof Load	90.000 In.-lbs (10,000 N.m)
Mast Rotation	360°
Weight	21 lbs(9.5 Kg)

Note: Sleeves are designed to withstand the proof load rating of all standard CSG Systems masts.

Materials and Construction:

General Construction	Welded Steel/Stainless Steel
Weld Certification	CWB-47.1
Structure Material	A-36 Steel Plate/304 S.S.
Sleeve Material	Sch. 40 Pipe/304 S.S.
Sleeve Bearing Material	PVC Pipe - ASTM-D-1785
Thrust Bearing Material	High Density Polyethene
Finish (*Steel Sleeves*)	Zinc Plated
Finish (*Stainless Steel*)	Brush Blast
Plating Specification	ASTM Designation B633-85, Type III, SC2

Mounting Requirements(minimum):

Concrete: thickness 6" (150 mm)

The Structure and mounting hardware must be capable of withstanding a 90,000 in.-lbs (10000 N.m) moment and a 5000 lbs. (2268 Kg.) vertical load. Installation **MUST BE** approved to local regulations by a qualified engineer.

Application Restrictions:

1. Sleeves are for use with masts & accessories manufactured by Capital Safety Group Ltd. **ONLY**.
2. System design factor depends on other system components and the configuration in which they are assemblied. The minimum design factor for all standard CSG Safety Systems masts and accessories is 4:1.
3. If base material does not meet minimum requirements, reinforcement **MUST BE** added to meet minimum requirements.
4. Each installation **MUST BE** approved to local standards by a qualified engineer.

Certification

CE

ISO 9001
REGISTERED

Flush Mount Sleeve

Model#: 8510311 (Mild Steel) / 8512828 (S.S.)

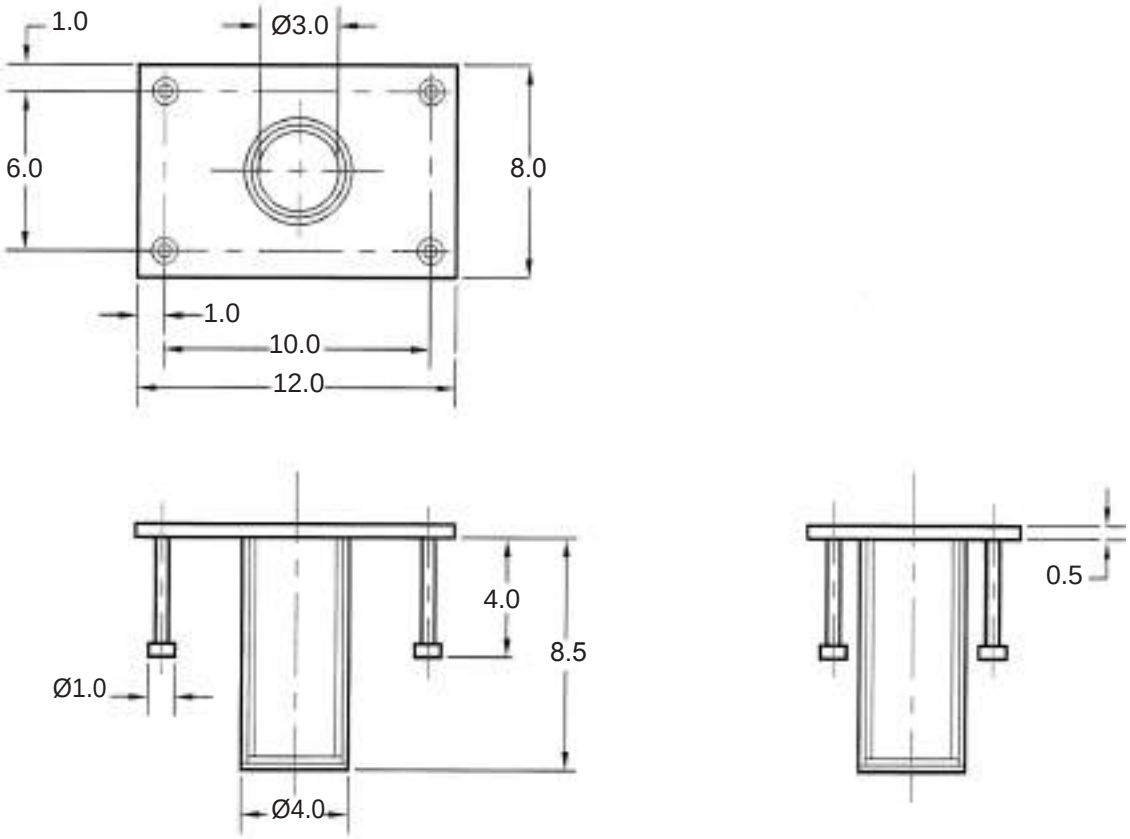

CE

ISO 9001
REGISTERED

Flush Mount Sleeve
Model#: 8510316 (Mild Steel) / 8512827 (S.S.)

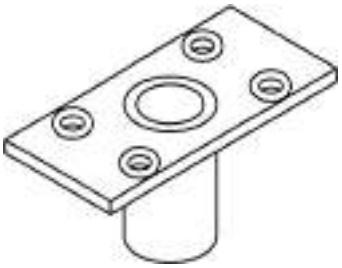

DESCRIPTION

Zinc plated mild steel or 304 stauinless steel construction. Recessesd fastenrer allow for bolt -in installations into existing concrete or steel structure. Flush mount deep design allows passage of traffic and eliminates trip hazards when not in use. Comes with PVC sleeve liner.

General Specifications:

Rated Capacity*(work load)*	450 lbs. (204 Kgs.) @ minimum 4:1 Design Factor *(see appl. restriction 2)*
Mast Moment Proof Load	90,000 in.llbs (10,000N.m)
Mast Rotation	360°
Weight	21 lbs. (9.5 kg)

Note: Sleeves are designed to withstand the proof load rating of all standard CSG Systems masts.

Materials and Construction:

General Construction	Welded Steel/Aluminum
Weld Certification	CWB-47.1,
Structure Material	A-36 Steel Plate/304 S.S.
Sleeve Material	Sch. 40 Pipe/304 S.S.
Sleeve Bearing Material	PVC Pipe, ASTM-D-1785
Thrust Bearing Material	High Density Polyethene
Finish (*Steel Sleeves*)	Zinc Plated
Finish (*Stainless Sleeves*)	Brush Blast
Plating Specification	ASTM Designation B633-85, Type III, SC2

Mounting Requirements(minimum):

Concrete thickness: 6" in (150 mm)

The Structure and mounting hardware must be capable of withstanding a 90,000 in.-lbs(10000 N.m) moment and a 5000lbs. (2268 Kg.) vertical load. Installation MUST BE approved to local regulations by a qualified engineer.

Application Restrictions

1. Sleeves are for use with masts & accessories manufactured by Unique Concepts Ltd. ONLY.
2. System design factor depends on other system components and the configuration in which they are assemblied. The minimum design factor for all standard CSG Safety Systems masts and accessories is 4: 1.
3. All welding is to be carried out by qualified personnel.
4. If base material does not meet minimum requirements, reinforcement MUST BE added to meet minimum requirements.
5. Each installation MUST BE approved to local standards by a qualified engineer.

CERTIFICATION

CE

ISO 9001
REGISTERED

Flush Mount Sleeve

Model#: 8510316 (Mild Steel) / 8512827 (S.S.)

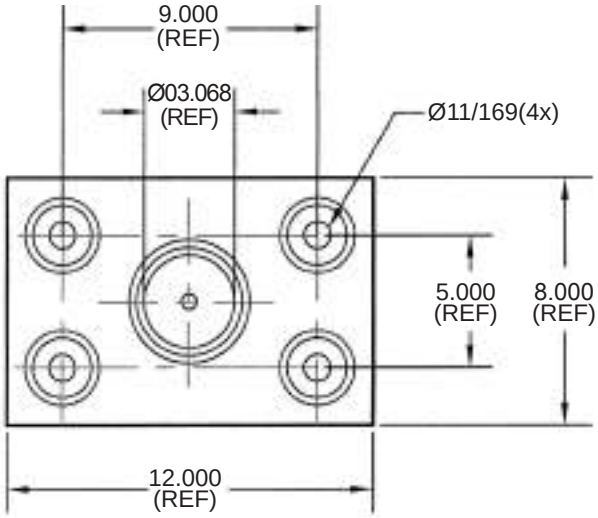

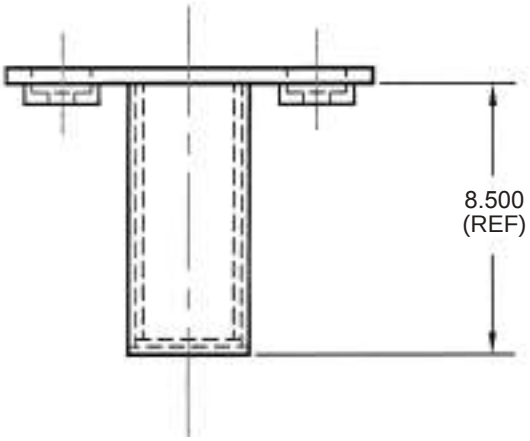

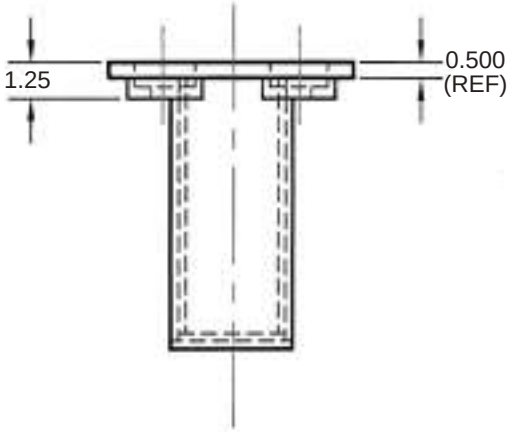

CE

ISO 9001
REGISTERED

Center Mounting Sleeve

Model#: 8512831 & 8516563

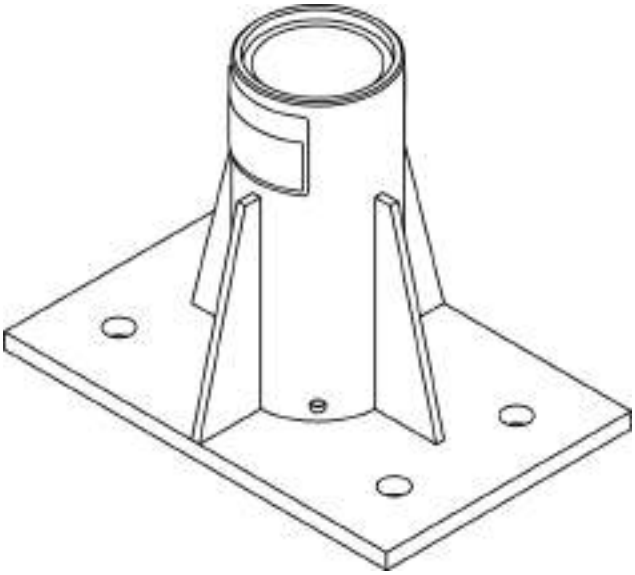

DESCRIPTION

The CSG models 8512831 & 8516563 Center Mount Sleeves are designed for permanently mounted base applications requiring loading at multiple mast positions.

General Specifications:

Rated Capacity (working load)	450 lbs. (250 kgs.) @ minimum 4:1 Design Factor (see appl. restriction 2)
Mast Moment Proof Load	90,000 in-lbs (10000 N-m)
Proof Tests	Uct-174
Mast Rotation	360°
Weight	24 lbs (11 kg)

NOTE: sleeves are designed to withstand the proof load rating of all standard UCL Systems masts.

Materials and Construction:

General Construction	Welded Steel/Stainless Steel
Weld Certification	CWB-47.1
Structure Material	A-36 Steel Plate/304 S.S.
Sleeve Material	Sch. 40 Pipe/304 S.S.
Sleeve Bearing Material	PVC Pipe - ASTM-D-1785
Thrust Bearing Material	High Density Polyethene
Finish (Steel Sleeves)	Zinc Plated
Finish (Stainless Steel)	Brush Blast
Plating Specification	ASTM Designation B633, TYPE II, CLASS 1

Mounting Requirements (minimum):

The structure and mounting hardware must be capable of withstanding a 90,000 in-lb (10000 N-m) moment and a 5000 lb (2268 kg) vertical load.

Anchors used to mount this base must have an installed minimum pull-out strength of 10000 lb (44.4 kN) and a shear strength of 5000 lb (22.2 kN). Installation must be approved to local standards by a qualified engineer.

Application Restrictions

1. Sleeves are for use with masts & accessories manufactured by Capital Safety Group **ONLY**.
2. System design factor depends on other system components and the configuration in which they are assembled. The minimum design factor for all standard CSG Safety Systems masts and accessories is 4:1.
3. All welding is to be carried out by qualified personnel.
4. If base material does not meet minimum requirements, reinforcement **MUST BE** added to meet minimum requirements.
5. Each installation **MUST BE** approved to local standards by a qualified engineer.

Installation:

Installation requires four fasteners to attach the center mounting sleeve to the structure. These fasteners must be able to withstand the minimum mounting requirements as stated.

CE

ISO 9001
REGISTERED

Center Mounting Sleeve

Model#: 8512831 & 8516563

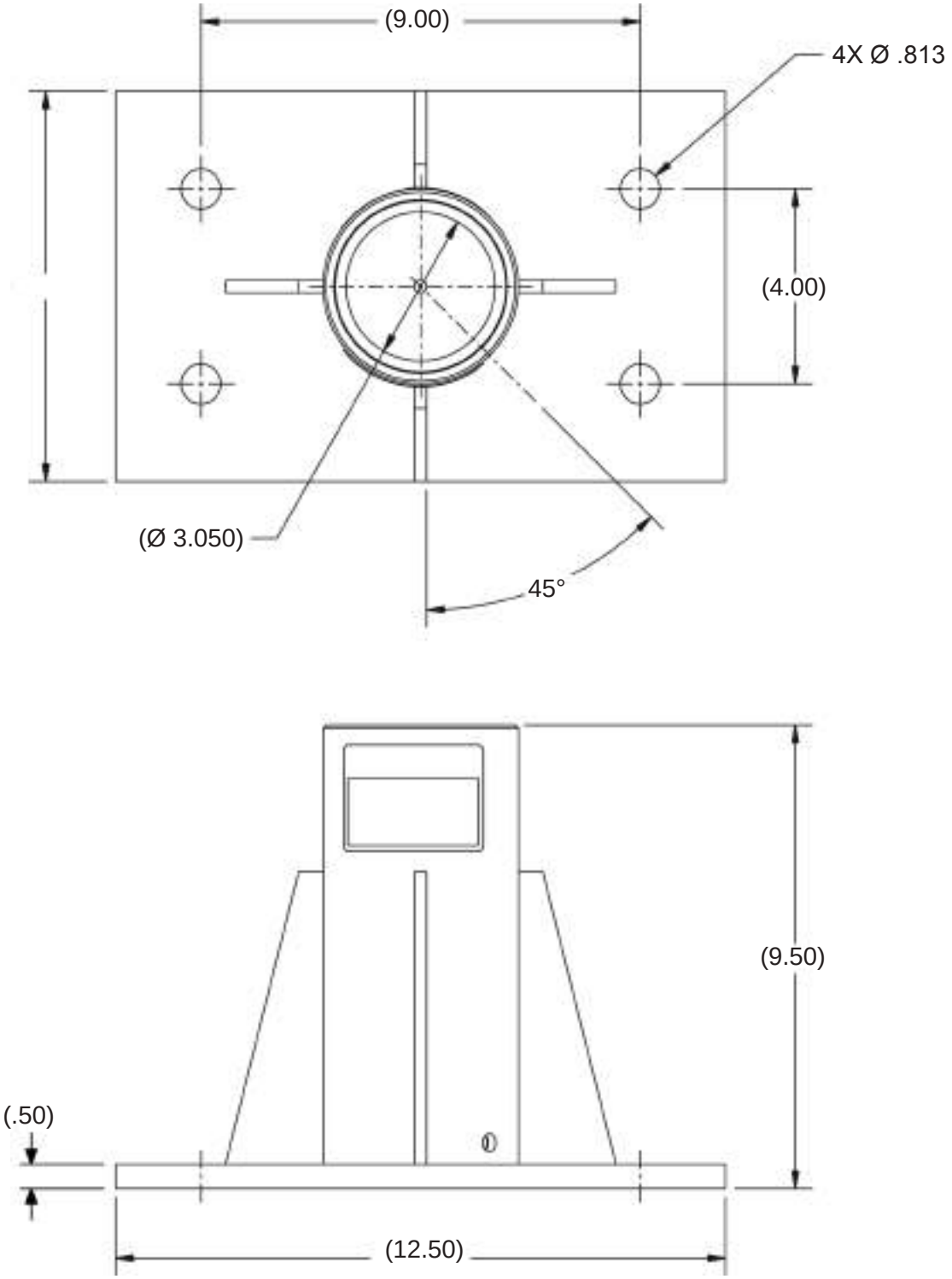

CE

ISO 9001
REGISTERED

CSG Advanced Floor Mount Sleeve
Model#: 8516190 (Mild Steel) / 8518347 (S.S.)
8518503 (Galvanised Steel)

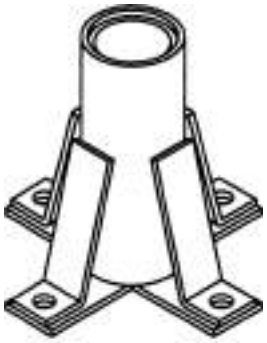

Description

Zinc plated* mild steel or 304 stainless steel construction. Mounts to horizontal concrete or steel structure. Comes with PVC sleeve liner.

* CSG Safety Systems Advanced Series sleeves feature zinc plating with a CS -500 sealant finish providing corrosion resistance similar to hot-dip galvanizing

General specifications:

Rated Capacity(*working load*)	450 lbs. (205 Kgs.) @ minimum 4:1 Design Factor *(see appl. restriction 2)*
Mast Moment Proof Load	90.000 In.-lbs (10,000 N.m)
Proof Tests	UCT - 309, UCT - 313, 440
Mast Rotation	360°
Weight	13 lbs(5.9 Kg)

Note: Sleeves are designed to withstand the proof load rating of all standard CSG Systems masts.

Materials and Construction:

General Construction	Welded Steel
Weld Certification	CWB-47.1
Structure Material	A-36 Steel Plate/304 S.S.
Sleeve Material	Sch. 40 Pipe/304 S.S.
Sleeve Bearing Material	PVC Pipe - ASTM-D-1785
Thrust Bearing Material	High Density Polyethene
Finish (*Steel Sleeves*)	CS-500 Zinc Plated
Finish (*Stainless Steel*)	Brush Blast
Plating Specification	ASTM Designation B633-85, Type III, SC2

Mounting Requirements(minimum):

The Structure and mounting hardware must be capable of withstanding a 90,000 in.-lbs(10000 N.m) moment and a 5000 lbs. (22.2 kN.) vertical load.
Anchors used to mount this base must have an installed minimum pull-out strength of 12000 lb (53.3 KN) and a shear strength Of 5000 lb (22.2 KN).
Installation **MUST BE** approved to local regulations by a qualified engineer.

Application Restrictions:

1. Sleeves are for use with masts & accessories manufactured by Capital Safety Group Ltd. **ONLY**.
2. System design factor depends on other system components and the configuration in which they are assemblied. The minimum design factor for all standard CSG Safety Systems masts and accessories is 4:1.
3. All welding is to be carried out by qualified personnel.
4. If base material does not meet minimum requirements, reinforcement **MUST BE** added to meet minimum requirements.
5. Each installation **MUST BE** approved to local standards by a qualified engineer.

CERTIFICATION

CE

ISO 9001
REGISTERED

CSG Advanced Floor Mount Sleeve
Model#: 8516190 (Mild Steel) / 8518347 (S.S.)
8518503 (Galvanised Steel)

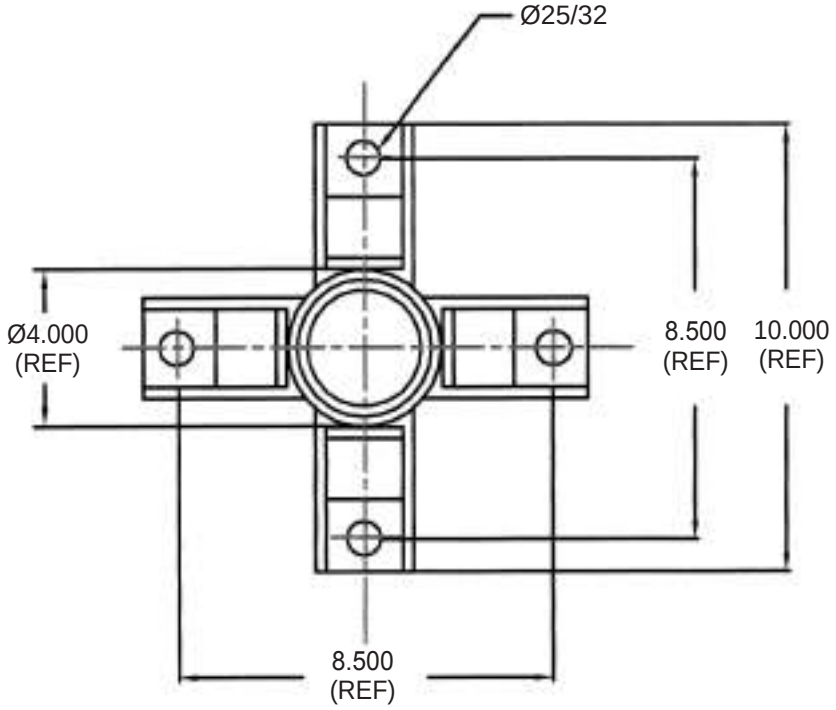

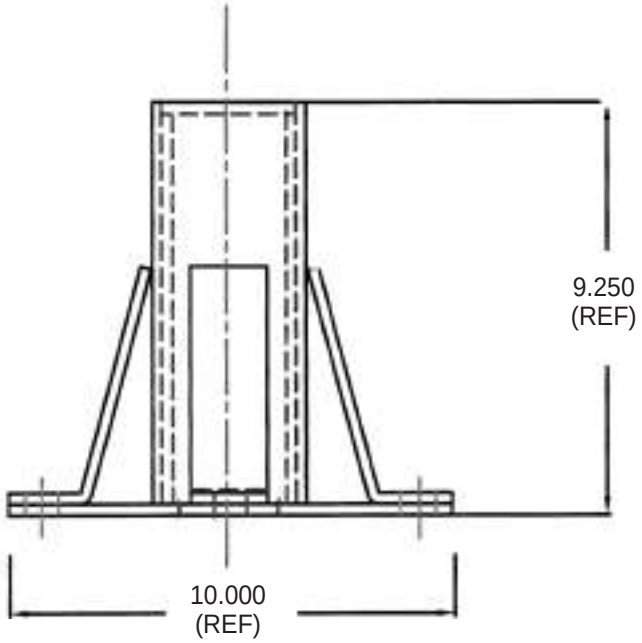

CE

ISO 9001
REGISTERED

Portable Fall Arrest System Floor Mount Sleeve
Model#: 8513945

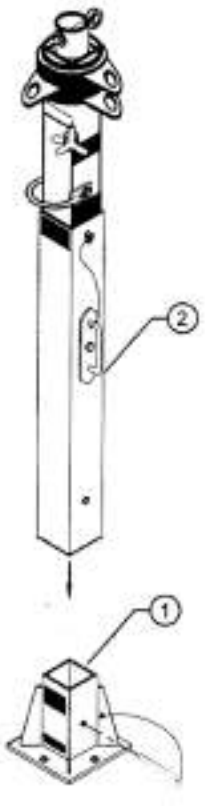

Model 8513945 includes the following

Item	Part no.	Qty.	Description
1	8513945	1	WELD ON SLEEVE
Accessories shown but not included			
2	8513391	1	Horizontal Lifeline Post

DESCRIPTION:

The CSG model 13945 Floor Mount Sleeve is designed for use with CSG Portable Fall-arrest System components in a variety of applications. Welded steel construction allows for bolt or weld-on installation and provides a permanent location for easy installation of the Portable Fall-arrest System posts.

General Specifications:

Rated Capacity	The Floor Mount Sleeve, when installed according to the mounting requirements section of this specification, meets or exceeds the rated capacity of all Portable Fall-Arrest System accessories.
Proof Load	Application Specific
Proof Tests	UCT-160, UCT-168, UCT-169, UCT-277
Weight	31 lbs. (14.5 Kgs.)

Materials and Construction:

General Construction	Welded Steel
Weld Certification	CWB-47.1
Material	HR Mild Steel
Hardware	Zinc plated steel
Plating Specifications	Type II, Type III Zinc, SC-2 ASTM B633-85
Finish	Supplied in bare steel for welding, zinc plated available for bolt on installations.

Application Restrictions

1. This product is designed for use with accessories manufactured or approved by Capital Safety Group Ltd. only.
2. All accessories MUST BE compatible with all other system components' requirements, and MUST BE installed, used and maintained according to the manufacturer's instructions.
3. Each installation MUST BE approved to local standards by a qualified engineer.

Mounting Requirements:

To meet the strength requirements of all currently approved applications of the horizontal lifeline post, this sleeve MUST BE mounted to a structure capable of supporting a minimum of 445,000 in/lb moment and a 5000 lb. (2272 kg) vertical load. This strength requirement however may be impractical and unnecessary for some applications.
Application specific mounting requirements may be determined by a qualified engineer giving due consideration to the rated capacities, proof load ratings, design factors and regulatory requirements of all system components and the system as a whole.
**see mounting recommendations on pg. 2 of 2*

CE

ISO 9001
REGISTERED

Portable Fall Arrest System Floor Mount Sleeve
Model#: 8513945

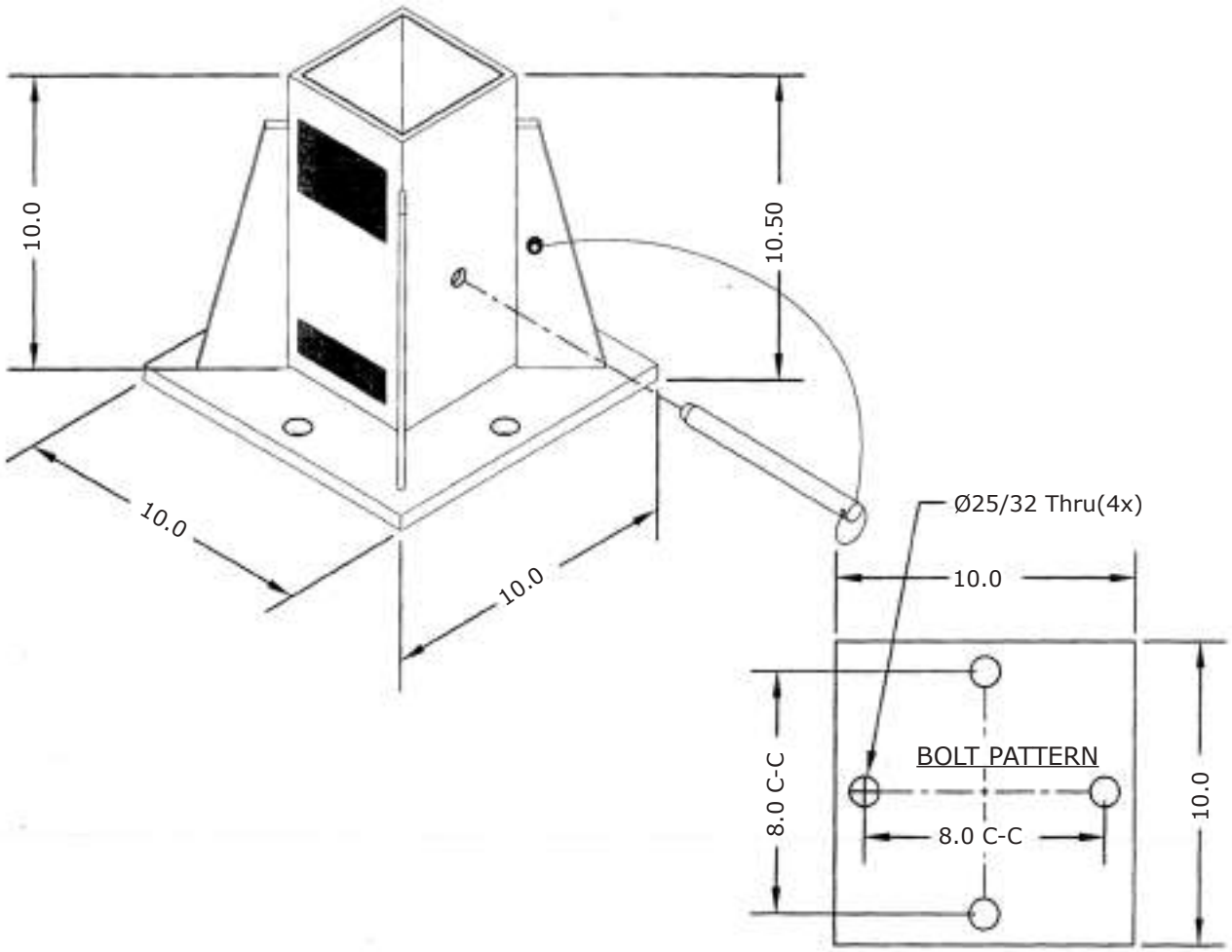

MOUNTING RECOMMENDATIONS FOR HORIZONTAL LIFELINE POST SLEEVES

Providing that all applicable strength requirements are met, CSG Safety Systems offers the following installation guidelines:

1. FOR BOLTED INSTALLATIONS

- Use 3/4" UNC grade 8 fasteners or better.
- For drill & tap installations, drill & tap a minimum of 1" deep full thread.
- Use zinc plated fasteners for additional corrosion resistance.
- Lock nuts and/or lockwashers and/or thread locker are recommended for all threaded installation.

2. FOR WELDED INSTALLATIONS

- Use a minimum 5/16" fillet weld for all structural welds.
- Seal weld all installations and seal weld any unused mounting holes to prevent corrosion under the plates.
- All welding **MUST BE** done by certified personnel using appropriate equipment and procedures.

3. FOR ALL INSTALLATIONS

- Existing structure **MUST BE** reinforced as instructed by the installing engineer.
- Sleeves, supporting and reinforcing structure should be painted after installation to prevent corrosion.
- With due consideration to all system components rated capacities, proof load ratings, design factors and applicable regulatory requirements, each installation **MUST BE** approved to local standards by a qualified engineer.
- Semi-annual inspection is required by OSHA, and must be performed by a competent fall-protection equipment/weldinq inspection person.

DECK MOUNT SLEEVE

MODEL: 8515162/8515834/8517245

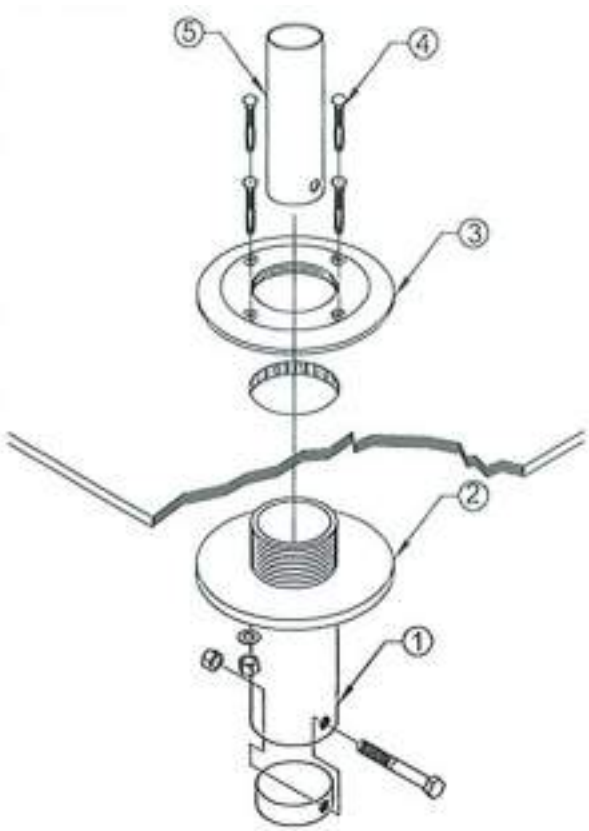

Model 15162 includes the following

Item	Part no.	Qty.	Description
1	N/A	1	Sleeve Tube Assembly
2	N/A	1	Lower Mounting Plate
2	N/A	1	Upper Mounting Plate
4	N/A	4	3/8 N.C. Flat Head Socket Cap Screw
5	N/A	1	Plastic Sleeve
6	N/A	4	5/16 USS Flat Washer
7	N/A	4	3/8 N.C Nylon Lock Nut
8	15105	1	Plastic Spacer

Description

The Deck Mount Sleeve is designed for permanent installation into steel or other suitable decking material from 1/4" - 2" thick.

Note: Deck thicknesses less than 112" (12 mn7) require shorter mounting bolts & deck thicknesses in excess of 1 112"(38 min)) require longer mounting bolts than are supplied standard. Please contact your local dealer or the manufacture for assistance.

General Specifications:

Rated Capacity (Working Load Limit)	450 lbs. (205 Kg.)
Proof Load	90,000 in.lbs. (10 KN.m)
Proof Tests	UCT-110, UCT-117
Weight	17 lbs. (7.7 Kg.)

Materials & Construction:

General Construction	Machined Steel/S.S.
Material	Mild Steel/304S.S./316S.S.
Hardware (minimum)	Gr.8 Steel, Zinc Plated/304 (18-8)316S.S.
Finish (Steel)	Zinc CS-500
Plating Specification	Type II, III Zinc SC2 ASTM B633-85

Application Restrictions

1. Minimum deck thickness 1/4" steel. Maximum deck thickness 2".

2. For use with DBI Sala products & accessories **ONLY**.

3. Mounting surface & hardware must be capable of supporting a minimum 90,000 in/lb. (10 Kn.m) moment and a 5000 lb. vertical load.

4. Each instalation MUST BE approved to local standards by a qualified engineer.

CE

ISO 9001
REGISTERED

DECK MOUNT SLEEVE

MODEL: 8515162/8515834/8517245

TOP VIEW

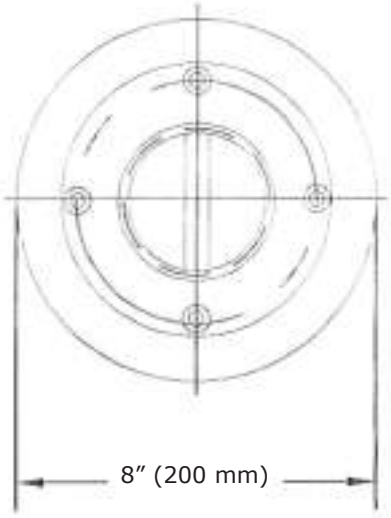

Installation Instructions:

1. Cut Ø4 1/16” hole through decking surface.

*2. Thread lower plate on to sleeve tube so that top of lower plate is deck thickness + 1/2” from the threaded end of sleeve tube.

3. Install sleeve tube & lower plate from underside of deck. Thread upper plate on to sleeve tube. Tighten using special installation tools *(item #13865)* or other means.

4. Using a Ø13/32 drill bit & using the holes in the upper plate as a guide, drill 4 holes through the deck and the lover plate.

5. From the top, install the 3/8” flat head socket cap screws Install flat washers & nuts below lower plate and tighten using the appropriate tools.

Note: use red (#262 or #271) loctite or equivalent thread locker on all threaded connections

** For deck thicknesses less than 1/2” (12 mni) shorter mounting bolts **MUST BE** used.*

** For deck thicknesses greater than 1 112” (39 nmm) longer mounting bolts **MUST BE** used. Contact your local dealer or the manufacturer for assistance.*

SIDE VIEW

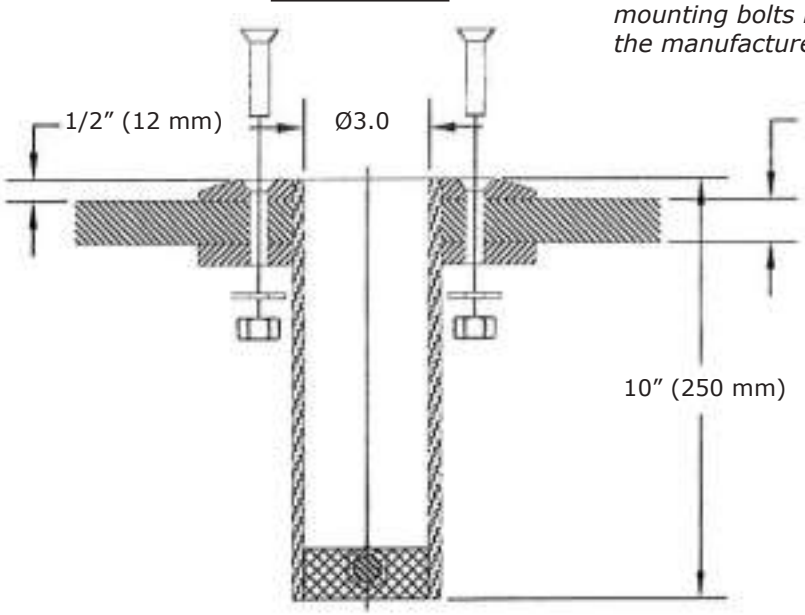

ALL MOUNTING HARDWARE MUST BE PURCHASED FROM YOUR LOCAL DEALER OR CAPTIAL SAFETY.

CE

ISO 9001
REGISTERED